WaterFilters
AUSTRALIA

premium

PREMIUM FILTER SYSTEM

OWNER'S MANUAL

MODELS:
K-B-PREMIUMGN (Gooseneck)
K-B-PREMIUMSQ (Square neck)

Owners Manual

INSTALLATION INSTRUCTIONS

IMPORTANT - PLEASE NOTE

PLEASE NOTE FOLLOWING FOR INSTALLATION OF THIS SYSTEM

- HOSE FITTINGS & HEX ADAPTER WITH SEALING O-RING
  The braided pex hoses and hex adapter (if supplied) are fitted with a sealing o-ring – teflon tape / joining compound is not required for this fitting. Check the fitting to ensure the o-ring is in place and not damaged. Ensure the inlet thread and mounting surface are smooth and clean. O-ring grease may be applied to the o-ring as required. Tighten until the o-ring contacts the surface of the filter head assembly inlet and outlet, then further tightened by 0.5 turns to reach approx 3.5 nm of force to compress the o-ring and effect a seal. DO NOT USE A SEALING TAPE OR A JOINING COMPOUND WHEN CONNECTING THE HOSES AND/OR ADAPTER TO THE HEAD ASSEMBLY.

- MAXIMUM WATER PRESSURE – PRODUCT WARRANTY
  Australian standards call for a maximum water pressure of 500 kpa for plumbing installations. Having water pressure above 500 kpa may damage connected products including water filters and will void the product warranty. If water pressure exceeds 500 kpa a watermark approved pressure limiting valve must be installed at the same time as installing the water filter system.
- When installing this filter system in a new home or kitchen please ensure that the cold water lines under the sink are flushed to remove all debris within the pipes, before installation of the water filter system.

1. Open Carton and Inspect Parts. Installation Parts included – refer installation diagram

Item No.	
Cistern Tap ½" fbsp x ½" mbsp	(1)
Dual Check Valve ½" fbsp x ½" mbsp	(2)
Pex Hose 650mm X 2 with sealing o-ring	(3)
Head Assembly & Mounting bracket	(4)
Filter Cartridge	(5)
Filter Tap	(6)
Mounting Screws	(7)
Plumbing Tape	(8)

2. Connect to Water Supply
   It is advisable to turn off the water supply at the mains before commencing installation.

Check to see if separate water connection is provided.

IF A SEPARATE WATER CONNECTION IS NOT PROVIDED

- Locate the cistern tap mounted on the wall underneath the sink for the existing cold water line.
- Turn off isolation cistern tap and disconnect attached fittings.

Using plumbing tape:

- Attach the following parts to the cistern tap according to the Connection Diagram below.
  Brass Female Tee ½" BSP*

CONNECTION DIAGRAM

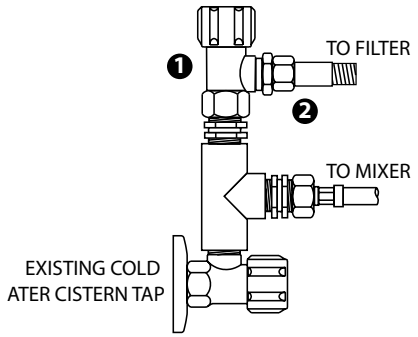

  Brass Nipple ½" BSP – ½" BSP (x2)*
  Cistern Tap supplied
- Reconnect the cold water line to the available ½" connection. Firmly tighten all connections

* Parts not included with system.

3. Undersink Mounting Position
   This Water Filter System can be installed in either the horizontal or vertical position. Horizontal is preferable.

   a) *Horizontal Position*
   Measure 420mm horizontally, and mark the mounting location for the side of the Filter Head Assembly and end of the filter cartridge. Make sure that there is adequate space to avoid crimping the water line flex hoses. Also make sure your chosen location offers easy access for future cartridge changes.

   b) *Vertical Installation*
   Measure 420mm from the base of the cabinet (or shelf), and mark the mounting location for the top of the Filter Head Assembly. Make sure that there is adequate space to avoid crimping the water line flex hoses. Also make sure your chosen location offers easy access for future cartridge changes.

4. Important - If necessary you can easily change the direction of the flow of water through the inlet and outlet of the filter system. You will notice on the head assembly that the inlet is shown by the word "IN" and the outlet is shown by the word "OUT". To change direction, simply remove the four (4) screws that hold the mounting bracket to the head assembly and replace/refit the mounting bracket in the opposite direction. This allows flexibility when choosing the desired location for your filter system.

   a) Connect Pex Hoses (item 3) to the inlet and outlet of the Filter Head Assembly (item 4). The Pex Hose has a sealing o-ring. Do not use plumbing tape when installing the hoses into the head assembly.

   b) Securely mount the Filter Head Assembly (item 4) on the cabinet wall using two of the mounting screws (item 9) provided.

5. Connect Dual Check Valve – (item 2) IMPORTANT – It is a legal requirement under Australian Plumbing Standards that the Dual Check Valve be installed. If this part is not installed all warranties are null and void.

   Apply plumbing tape to the 1/2" male connection on the outlet of the existing cistern tap. Wrap tape in direction of the threads to ensure a tight fit and avoid leaks. Screw on the Dual Check Valve (item 2) and secure.

6. Attach Pex Hose
   Connect the ½" female end of the Pex Hose (item 3 - inlet side) to the ½" male end of the Dual Check Valve.

7. Install the Filter Tap (refer diagram)
   Assemble and mount the tap. Tighten locking nut beneath the sink to secure the tap firmly in position. If a hole for the Filter Tap is not provided, then use a drill or hole cutter to cut a 12.7mm (½") hole in the sink or counter top where the tap is to be located.

   Please ensure that you use plumbing tape when connecting the chrome brass adaptor to the bottom of the filter tap.

8. Attach Filtered Water to Cold Water Line of Filter Tap
   Take the braided Pex Hose from the outlet of the Filter Head Assembly and connect to the chrome brass adaptor at the bottom of the filter tap.

9. Flush the Filter Cartridge

   a) Turn water supply back on at either the mains or at the cold water mini cistern tap.

   b) At this stage check for leaks and fix if necessary

   c) Turn kitchen tap on and flush the Filter Cartridge for at least 2–3 minutes. Collect water in container and use for garden etc.

NOTE – Flushing the filter cartridge is important to remove air from the system and any loose carbon powder. At first the water may appear cloudy due to compressed trapped air in the filter and hoses. However the cloudiness will disappear over time and with use.

NOTES

1) This installation must comply with all applicable state and local regulations.

2) Do not use with water that is microbiologically unsafe or of an unknown quality without disinfection before or after the system.

3) When storing filtered water in a refrigerator please ensure the container has an air tight seal.

TAP INSTALL DIAGRAM

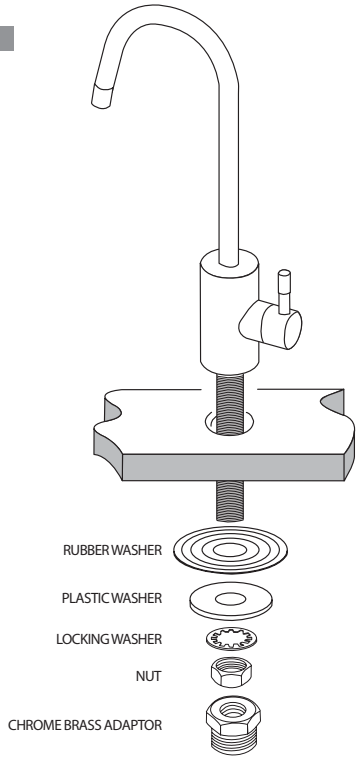

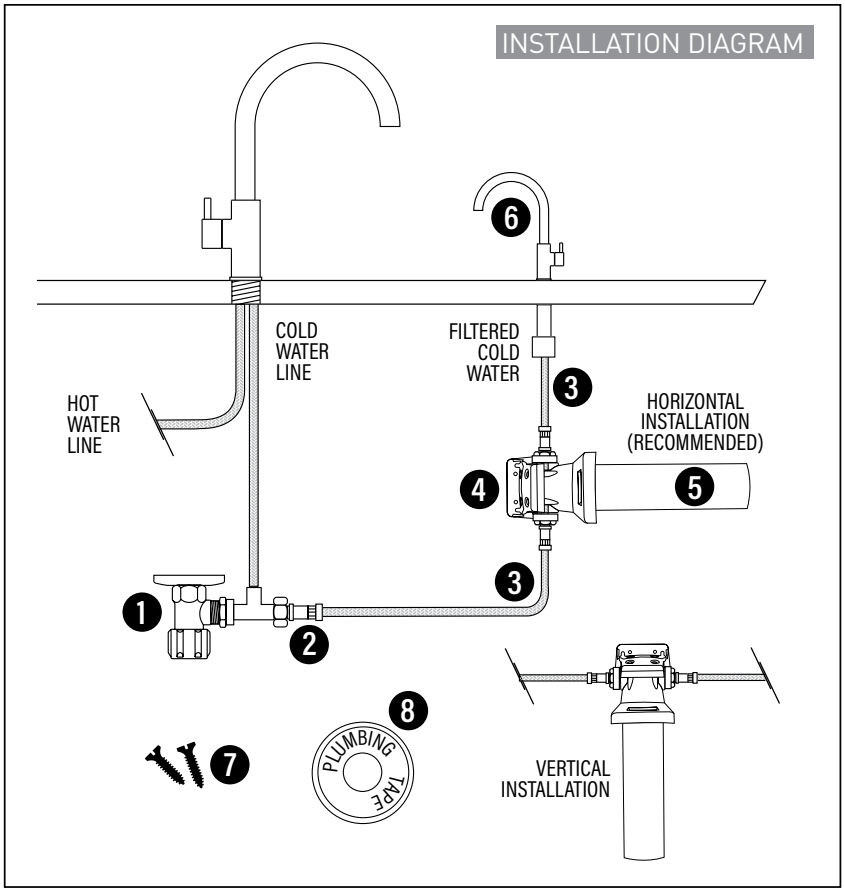

1. Cistern Tap ½" fbsp x ½" mbsp
2. Dual Check Valve ½" fbsp x ½" mbsp
3. Pex Hose 650mm X 2 with sealing o-ring
4. Head Assembly & mounting bracket
5. Filter Cartridge
6. Filter Tap
7. Mounting Screws
8. Plumbing Tape

PRODUCT SPECIFICATION

- Usage: For mains cold water only.
- Temperature Range: 2-38°C
- Min.-Max. Working Pressure: 70-500 kPa
- Service Flow Rate: 0–3 Litres per minute*
- Service life: 12 months*
- Rating: 1 micron cyst rated
- Removes/Reduces: Chlorine, cysts, giardia, cryptosporidium, bad taste and odours, and all particles down to 1 micron in size
- This filter does not remove fluoride
- Filter Change: Annually or sooner if flow rate becomes inconveniently slow.

** Subject to water quality, water pressure and usage*

WARRANTY

Product Specifications: *The unit must only be used for a potable water source and with cold water (with a temperature range between 2 and 38° C).*

Water Filters Australia Pty Ltd (WFA) warrants to you, the first person who has purchased and used the unit ("you") that this unit is free from defects due to faulty material and workmanship in accordance with the conditions set out in this document. This warranty is provided to you in addition to your rights at law, including but not limited to your rights under the Trade Practices Act 1074 (Cth) and applicable legislation in your Australian State or Territory.

What this warranty covers:

This warranty covers defects due to faulty material and workmanship of the unit supplied to you:

- For a period of 10 years from the date of purchase in respect of the entire unit, excluding the Replaceable Elements. The Replaceable Elements are consumable components and all parts of the unit which can be replaced including but not limited to the filter or water treatment cartridge if there is a defect in the filter or cartridge. This does not include the replacement of the filter or cartridge to extend the life of the filter or cartridge. The life of the filter cartridge is affected by water quality, usage and water pressure. The warranty only extends to the original purchaser of the unit.

What this warranty does not cover:

This warranty does not cover the unit or a Replaceable Element of the unit where:

- The defect, fault or failure is attributable, or substantially attributable to misuse, abuse, accident, misapplication, neglect, freezing, oxidizing agents (including but not limited to chlorine, ozone, chloramines and other related components) or act of God.
- The unit has been in conditions which do not conform to the recommended design guidelines or has been operated in a manner which is contrary to WFA's printed instructions.
- The unit has not been installed in accordance with WFA's printed instructions and has not been installed in compliance with all applicable laws, regulations and industry standards.
- The unit has not been used in accordance with the manufacturer's instructions.

- The unit does not meet the conditions for use described in the owner's manual or performance data sheet for this unit.
- You use accessories or components which do not meet WFA's specifications as set out in the Owners Manual.
- The defect, fault or failure is due to normal wear and tear.
- The defect, fault or failure has occurred where the unit has been used reasonably or has reached its serviceable life.
- The serial or model number label of the unit is removed or defaced.
- The unit is serviced, modified, altered or repaired by an unauthorized or unqualified person.

How to make a claim under this warranty:
To make a claim under this warranty you must contact WFA within 21 days of the defect, fault or failure occurring. WFA's Warranty Contact number is 1300 785 355. At the time of repair or replacement under your warranty claim you must provide to WFA:

- Proof that you purchased the unit from an authorized retailer or dealer within the warranty time; and
- A copy of a certificate which certifies that the unit was installed in compliance with our printed installation instructions and all applicable laws, regulations and industry standards. WFA will only pay for repair or replacement upon receipt of proof of your purchase showing the date of purchase.
- Immediately execute measures to mitigate damages as well as protection from any secondary damages
- WFA may arrange for examination of the claim by WFA or an assignee thereof and agrees to assess any claim under Warranty within sixty (60) days of receiving notification of a claim.
- WFA is entitled to investigate the damage within an appropriate period of time, either by itself or by a third party.
- Any parts believed to be responsible for the damage are to be made available to WFA for investigation and are to be kept by WFA until the final investigation of the damage is complete.
- WFA will inform the Consumer or its assignee immediately after the investigation as to whether the Warranty claim is accepted and if so provide information regarding remedy.
- If any of the above specified obligations are violated then WFA is released from the liability arising from this statement

Limitation of Liability of WFA under this warranty:
Where a warranty exists or is implied by law, WFA liability is limited (to the extent that it can be limited) to repair or replacement of the faulty Replaceable Element or the unit or an equivalent unit. WFA may, in its discretion, choose whether it shall repair or replace any unit or Replaceable Element or WFA may choose to pay to you the cost of replacing the Replaceable Element or the unit or the cost of having the unit repaired. To the extent permitted by law, WFA assumes no liability whatsoever and disclaims all liability for direct, indirect or consequential loss, or special, general or other damage or expense caused by or arising out of:

- Any failure to install or use the unit in accordance with the Manufacturer's Instructions, the Installation and Operating Manual or WFA's printed instructions; or
- The purpose for which you are purchasing the unit.

You acknowledge that the quality of water supplied and your water usage rate and influent water pressure may vary seasonally or over a period of time.

In addition to this water characteristics can differ if the unit is relocated or the environment changes.

You acknowledge that WFA does not know your requirements and cannot and does not warrant that the unit is fit for the purpose for which you intend to use the unit or is appropriate for the purpose for which you intend to use the unit. WFA does not authorize others to assume any obligation on its behalf even if you inform them of the purpose for which you intend to use this unit.

WARNING WFA does not recommend making alterations to your existing plumbing to accommodate this filter system. If you wish to modify existing plumbing you must comply with AS 3500 and use a licensed plumber.

WARNING The contaminants or other substances removed or reduced by this water treatment system are not necessarily in your water supply. Do not use with water that is microbiologically unsafe or of an unknown quality without disinfection before or after the system.

IMPORTANT This filter is designed to be used with mains/city water supplies.

CAUTION Safely isolate the water supply prior to installing the filter system to avoid injury and property damage.

Our goods come with guarantees that cannot be excluded under the Australian Consumer Law. You are entitled to a replacement or refund for a major failure and for compensation for any other reasonably foreseeable loss or damage. You are also entitled to have all the goods repaired or replaced if the goods fail to be of acceptable quality and the failure does not amount to a major failure.
Refer to wfa.com.au for warranty details.

Performance Data

Important Notice:
Read this performance data sheet and compare the capabilities of this unit with your actual water treatment needs.

FEATURES:
Provides filtered water through a dedicated filter tap
Provides quality filtered water
Easy installation and space saving design
Compatible with any bench top including solid surface
Suitable for vertical or horizontal installation to maximise cupboard space
Finely filters to 1 micron and polishes mains water to a premium quality for:

- Drinking
- Cooking
- Tea & coffee
- Washing fruits & vegetables

The latest carbon block filtration technology reduces/removes:

- Chlorine
- Bad tastes
- Odours
- Dirt
- Rust
- Cysts (e.g. giardia & cryptosporidium)

Maintains healthy minerals and salts as well as fluoride
Simple, easy to change DIY cartridge replacements

Substance Requirements	Influent Challenge Concentration	Max. Permissible Product Water Concentration	Reduction Requirements	Minimum Reduction	Average
Standard 42	**Aesthetic Effects**				
Chlorine	2.0mg/L±10%	5ppm	≥50%	25%	99%
Particulate Nominal <1um	at least 10,000	- particles/mL	≥85%	-	99.99%
Standard 53	**Health Effects**				
Cyst	Minimum 50,000/L	-	99.95%	99.99%	99.99%

*Tested using flow rate=0.5gpm; pressure=60psig; pH=7.5 ± 0.5; temp=20°C ± 2.5°C

HEALTH CLAIM PERFORMANCE CLASSIFIED BY NSF.

This system has been tested according to NSF/ANSI 42 and 53 for the reduction of the substances listed.

The concentration of the indicated substances in water entering the system was reduced to a concentration less than or equal to the permissable limit for water leaving the system, as specified in NSF/ANSI 42 and 53.

OPERATING SPECIFICATIONS:

- Service life: 12 months*
- Pressure Requirement: 70-500 kPa
- Temperature: 2-38^0 C
- Flow Rate: 0 - 3 litres per minute.

GENERAL INSTALLATION / OPERATION / MAINTENANCE REQUIREMENTS:

- Space required: 420mm x 225mm (allows space for cartridge replacement)
- Install cartridge vertically or horizontally. However for ease of replacing cartridge, horizontal installation on right or left hand side of undersink kitchen cabinet is preferable.
- Flush new cartridge at full flow for 2–3 minutes until air is purged.
- Replace cartridges when capacity is reached, or when flow becomes too slow, but at least annually.

SPECIAL NOTICES:

- Installation instructions, parts and service availability, and standard warranty are included with the product when shipped.
- This drinking water system must be maintained according to manufacturer's instructions, including replacement of filter cartridges.
- Do not use with water that is microbiologically unsafe, or of unknown quality without adequate disinfection before or after the system.
- The contaminants or other substances removed or reduced by the water treatment system are not necessarily in your water.
- Check for compliance with state and local laws and regulations.

** Cartridge life and capacity will vary according to water pressure, water quality and usage*

CARTRIDGE RE ORDER CODE: C-B-PREMIUM

Check for compliance with state and local laws and regulations. Product performance is dependent upon incoming water conditions. This drinking water system must be maintained according to the manufacturer's instructions, including replacement of cartridge.

WaterMark

AS3497
Lic.WMKA22045
IAPMO R&T OCEANA

This appliance meets the domestic water treatment appliance Standards AS/NZS3497 for the following water treatment processes:

CLASS		TREATMENT TYPE	FUNCTION	PASS
I.		Microbiological Status Bacteriostatic	Will stop bacteria increasing but will not stop them unless IIa is passed.	N/A
II.	II (a)	Microbiological Treatment Bacteria Removal	Will remove or inactivate bacteria.	N/A
	II (b)	Virus Removal	Will remove or inactivate virus.	N/A
	III (c)	Protozoa Removal	Will remove or inactivate Cryptosporidium and Giardia.Will not remove or inactivate bacteria and virus unless II(a) and II(b) is passed.	✓
III.		Turbidity and Particulate Reduction	Reduces Cloudiness	✓
IV.		Taste and Odour Reduction	Reduces Tastes and Odours	✓
V.		Chemical Treatment	Decreases Carbon Chemicals and Chlorine	✓

System tested and Classified against NSF/ANSI Standards 42 and 53 for the reduction of:
Std. No 42 -
Aesthetic Effects
- Chemical Reduction
  - Chlorine
  - Taste & Odour
- Mechanical Filtration
  - Nominal Particulate

Std. No 53 -
Health Effects
- Mechanical Filtration
  - Cyst
  - Turbidity

NSF®

WATER QUALITY
WATER FILTER
ANSI/NSF
STANDARDS
42 AND 53
3LSD

WARNING: FOR CORRECT OPERATION OF THIS APPLIANCE IT IS ESSENTIAL TO OBSERVE THE MANUFACTURER'S INSTRUCTIONS.

MADE IN USA

ASSEMBLED IN AUSTRALIA

WaterFilters AUSTRALIA

Water Filters Australia Pty Limited ABN: 78 089 574 489
PO Box 636 Freshwater NSW 2096
Phone: 61 2 9905 6211 Fax: 61 2 9905 6255
Email: info@wfa.com.au
Web: www.wfa.com.au
For all enquiries call the National Customer Service Centre on: **1300 785 355**